NEW TEMPESTA 100
Head shower 4 sprays
MODEL # 27606

Pure Freude an Wasser

GROHE

GROHE America, Inc | 200 North Gary Avenue, Suite G, Roselle, IL 60172
Phone: +1 (800) 444-7643 | Fax: +1 (800) 225-2778 | us-customerservice@grohe.com

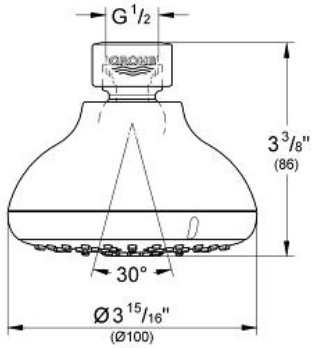

Product Description:
Head shower 4 sprays

Standard Specification:
Ø 4"
- Rotating ball joint ± 15°
- 1/2" Connection thread
- **GROHE DreamSpray®** perfect spray pattern
- **GROHE StarLight®** finish
- **SpeedClean®** anti-lime system
- **Inner WaterGuide** for a longer life
- Suitable for instantaneous heater
- Max Flow Rate 2.5 gpm (9.5 L/min)
- Min. recommended pressure: 15 psi

Applicable Codes & Standards:
- Energy Policy Act of 1992
- ASME A112.18.1/CSA B125.1
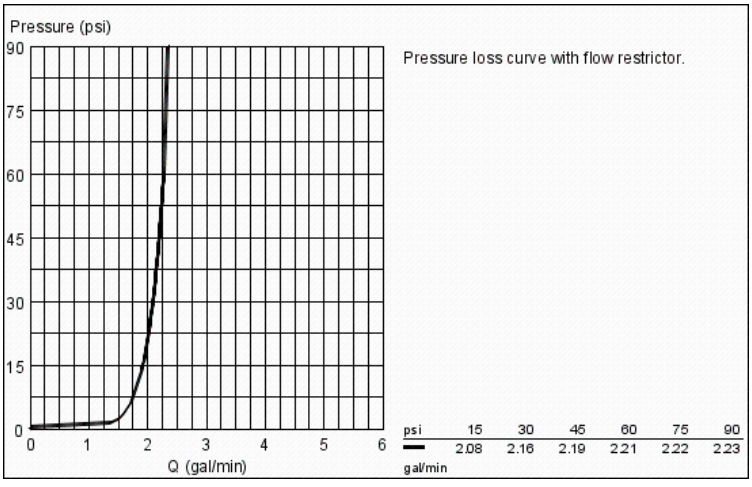
Color:
❑ 27606 000 chrome
❑ 27606 EN0 brushed nickel