RETRO-FIT 160
Shower System*
MODEL # 27867

Pure Freude an Wasser

GROHE

GROHE America, Inc | 200 North Gary Avenue, Suite G, Roselle, IL 60172
Phone: +1 (800) 444-7643 | Fax: +1 (800) 225-2778 | us-customerservice@grohe.com

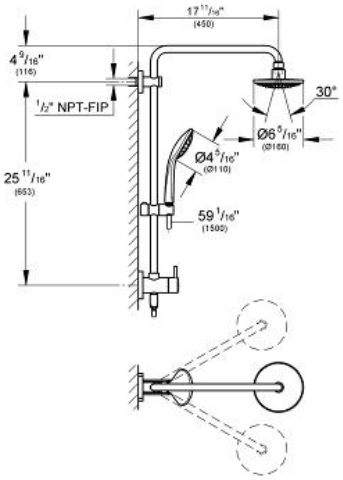

Product Description:
Shower System*

Standard Specification:
- Consisting of:
- Horizontal 45° swivel 17 11/16" shower arm
- Adjustable height bar with gliding element
- Metal shower hose 59" (28 417)
- Angle adapter
- Max Flow Rate 2.5 gpm (9.5 L/min)
- **GROHE StarLight®** finish
- **GROHE DreamSpray®** perfect spray pattern
- **GROHE CoolTouch®**
- **SpeedClean®** anti-lime system
- Rotation cone for Twist-free function
- **Suitable for instantaneous heaters from 18 kW/h**
- Max Flow Rate 2.5 gpm at 80 psi (9.5 L/min)

Applicable Codes & Standards:
- Energy Policy Act of 1992
- ASME A112.18.1/CSA B125.1

Color:
❑ 27867 000 chrome